Product Data

Side Discharge AC Models

For coastal applications where units are installed within one (1) mile of salt water, epoxy coated models are recommended. These models have an 8 week lead time after order.

	Epoxy Coated Model
4TTL6018A1000A	4TTL6018A1COTA
4TTL6024A1000A	4TTL6024A1COTA
4TTL6030A1000A	4TTL6030A1COTA
4TTL6036A1000A	4TTL6036A1COTA
4TTL6042A1000A	4TTL6042A1COTA
4TTL6048A1000A	4TTL6048A1COTA
4TTL6060A1000A	4TTL6060A1COTA

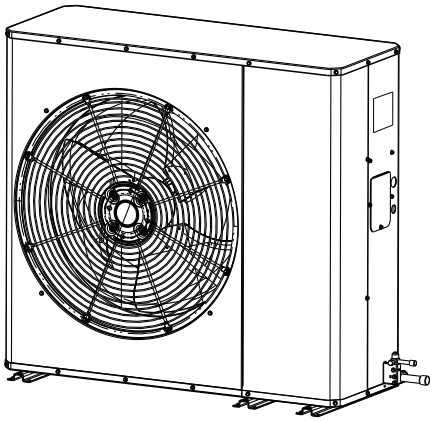

Note: *"Graphics in this document are for representation only. Actual model may differ in appearance."*

May 2020

22-1931-1H-EN

Outline Drawing

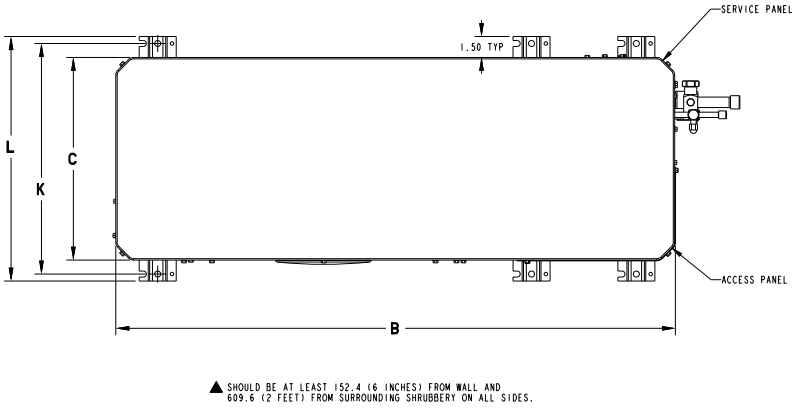

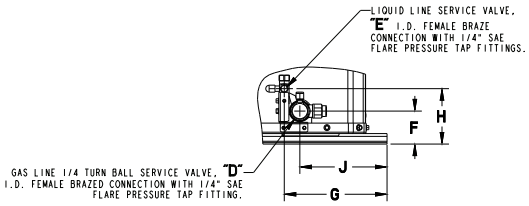

FIGURE 2

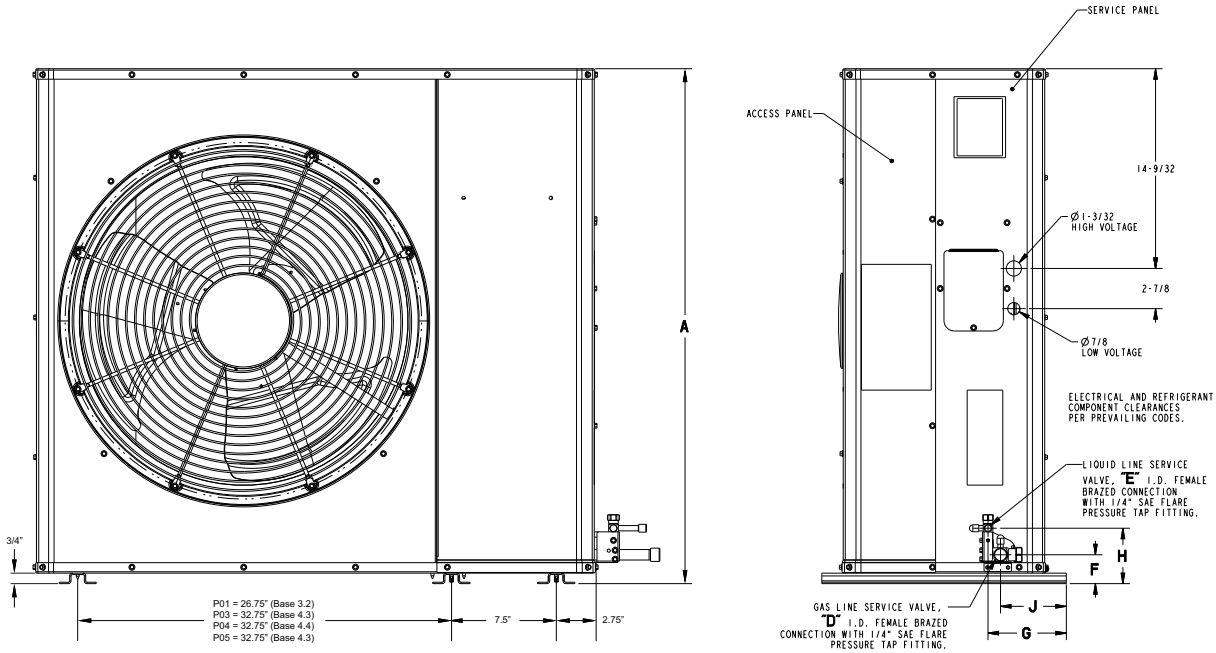

FIGURE 1

DWG. D159818_Rev D

Model	Base	A	B	C	D	E	F	G	H	J
4TTL6018A	3.3	934 (36–3/4)	1016 (40)	368 (14–1/2)	19 (3/4)	10 (3/8)	53 (2–1/16)	142 (5–19/32)	101 (3–31/32)	120 (4–23/32)
4TTL6024A	3.3	934 (36–3/4)	1016 (40)	368 (14–1/2)	19 (3/4)	10 (3/8)	53 (2–1/16)	142 (5–19/32)	101 (3–31/32)	120 (4–23/32)
4TTL6030A	3.3	934 (36–3/4)	1016 (40)	368 (14–1/2)	19 (3/4)	10 (3/8)	53 (2–1/16)	142 (5–19/32)	101 (3–31/32)	120 (4–23/32)
4TTL6036A	4.3	934 (36–3/4)	1194 (47)	445 (17–1/2)	22 (7/8)	10 (3/8)	53 (2–1/16)	187 (7–11/32)	101 (3–31/32)	159 (6–1/4)
4TTL6042A	4.3	934 (36–3/4)	1194 (47)	445 (17–1/2)	22 (7/8)	10 (3/8)	53 (2–1/16)	187 (7–11/32)	101 (3–31/32)	159 (6–1/4)
4TTL6048A	4.3	934 (36–3/4)	1194 (47)	445 (17–1/2)	22 (7/8)	10 (3/8)	53 (2–1/16)	187 (7–11/32)	101 (3–31/32)	159 (6–1/4)
4TTL6060A	4.4	1086 (42–3/4)	1194 (47)	445 (17–1/2)	22 (7/8)	10 (3/8)	60 (2–3/8)	187 (7–11/32)	101 (3–31/32)	159 (6–1/4)

Sound Power Level

MODEL	A-Weighted Sound Power Level [dB(A)]	Full Octave Sound Power(dB)							
		63 Hz*	125 Hz	250 Hz	500 Hz	1000 Hz	2000 Hz	4000 Hz	8000 Hz
4TTL6018A1	70	55	77	71	66	67	61	53	43
4TTL6024A1	70	55	77	71	66	67	61	53	43
4TTL6030A1	71	55	77	72	66	67	62	54	45
4TTL6036A1	72	56	76	76	70	66	62	55	48
4TTL6042A1	73	56	77	76	71	67	62	56	48
4TTL6048A1	73	56	77	76	71	67	62	56	48
4TTL6060A1	73	59	78	77	69	67	62	57	52

Note: Rated in accordance with AHRI Standard 270 *For Reference Only

MODEL	Sound Pressure [dB(A)]			
	3 ft	5 ft	10 ft	15 ft
4TTL6018A1	63	58	52	49
4TTL6024A1	63	58	52	49
4TTL6030A1	64	59	53	50
4TTL6036A1	65	60	54	51
4TTL6042A1	66	61	55	52
4TTL6048A1	66	61	55	52
4TTL6060A1	66	61	55	52

Note: Rated in accordance with AHRI Standard 275

Product Specifications

Model No. [a]	4TTL6018A1XXXA	4TTL6024A1XXXA	4TTL6030A1XXXA	4TTL6036A1XXXA
HIGH SPEED COOLING CAPACITY@ 80/67-95 (Btuh)	18000	24000	28200	35000
POWER CONNS. — V/PH/HZ [b]	208/230/1/60	208/230/1/60	208/230/1/60	208/230/1/60
MIN. BRCH. CIR. AMPACITY	12	13	17	19
BR. CIR. PROT. RTG. — MAX. (AMPS)	20	20	25	30
COMPRESSOR	CLIMATUFF®-SCROLL	CLIMATUFF®-SCROLL	CLIMATUFF®-SCROLL	CLIMATUFF®-SCROLL
RL AMPS — LR AMPS	9 — 48	10.1 — 52	12.8— 67.8	14.7— 75
Outdoor Fan FL AMPS	0.54	0.54	.64	.67
Fan HP	1/12	1/12	1/8	1/8
Fan Dia (inches)	23.5	23.5	23.5	27.0
Coil	PLATE FIN	PLATE FIN	PLATE FIN	PLATE FIN
Refrigerant R-410A	4 LBS., 10 OZ	4 LBS., 2 OZ	5 LBS., 9 OZ	6 LBS., 3 OZ
LINE SIZE — IN. O.D. GAS [c]	3/4	3/4	3/4	3/4
LINE SIZE — IN. O.D. LIQ.	3/8	3/8	3/8	3/8
Charge Spec. Subcooling	10°F	10°F	10°F	10°F
Dimensions H x W X D Crated (IN.)	40.75 x 47.5 x 20.0	40.75 x 47.5 x 20.0	40.75 x 47.5 x 20.0	40.88 x 54.5 x 23.0
Weight — Shipping (lbs.)	165	165	180	242
Weight — Net (lbs.)	145	145	160	215
Optional Accessories:				
Evaporator Defrost Control	AY28X079	AY28X079	AY28X079	AY28X079
Rubber Isolator Kit	BAYISLT101	BAYISLT101	BAYISLT101	BAYISLT101
Start Kit	BAYKSKT263	BAYKSKT263	BAYKSKT263	BAYKSKT263
Crankcase Heater Kit	BAYCCHT302RES	BAYCCHT302RES	BAYCCHT302RES	BAYCCHT302RES
Snow Leg Kit 4”	BAYLEGS004	BAYLEGS004	BAYLEGS004	BAYLEGS004
Snow Leg Kit 7”	BAYLEGS007	BAYLEGS007	BAYLEGS007	BAYLEGS007
Scroll Compressor Enclosure	BAYSDEN003	BAYSDEN003	BAYSDEN003	BAYSDEN003
Low Ambient Kit	BAYLOAM107A	BAYLOAM107A	BAYLOAM107A	BAYLOAM107A
Wall Mount Kit	BRK05033[d]	BRK05033[d]	BRK05033[d]	BRK05033[d]
Wind Baffle Kit	BAYWIND100	BAYWIND100	BAYWIND100	BAYWIND101
Refrigerant Lineset [e]				

[a] Certified in accordance with the Unitary Air-conditioner equipment certification program which is based on AHRI standard 210/240.
[b] Calculated in accordance with N.E.C. Only use HACR circuit breakers or fuses.
[c] Standard line lengths — 150’, Standard lift — 50’ Suction and Liquid line. For Greater lengths and lifts refer to refrigerant piping software Pub#32–3312–0* (* denotes latest revision)..
[d] Available from Trane Parts
[e] 25, 30, 35 and 50 foot linesets available. For a complete listing of lineset options available from equipment or supply stores, refer to the Trane Residential and Light Commercial Product Handbook.

Model No. [a]	4TTL6042A1XXXA	4TTL6048A1XXXA	4TTL6060A1XXXA
HIGH SPEED COOLING CAPACITY@ 80/67-95 (Btuh)	41000	46500	56000
POWER CONNS. — V/PH/HZ [b]	208/230/1/60	208/230/1/60	208/230/1/60
MIN. BRCH. CIR. AMPACITY	22	24	31
BR. CIR. PROT. RTG. — MAX. (AMPS)	35	40	50
COMPRESSOR	CLIMATUFF®- SCROLL	CLIMATUFF®- SCROLL	CLIMATUFF®- SCROLL
RL AMPS — LR AMPS	16.7 — 109	18.5 — 124	23.7 — 152.5
Outdoor Fan FL AMPS	1.18	1.18	1.05
Fan HP	1/5	1/5	1/5
Fan Dia (inches)	27	27	27
Coil	PLATE FIN	PLATE FIN	PLATE FIN
Refrigerant R-410A	6 LBS., 8 OZ	6 LBS., 6 OZ	7 LBS., 4 OZ
LINE SIZE — IN. O.D. GAS [c]	7/8	7/8	1–1/8
LINE SIZE — IN. O.D. LIQ.	3/8	3/8	3/8
Charge Spec. Subcooling	10°F	10°F	10°F
Dimensions H x W X D Crated (IN.)	40.88 x 54.5 x 23.0	40.88 x 54.5 x 23.0	46.88 x 54.5 x 23.0
Weight — Shipping (lbs.)	243	243	263
Weight — Net (lbs.)	216	216	236
Optional Accessories:			
Evaporator Defrost Control	AY28X079	AY28X079	AY28X079
Rubber Isolator Kit	BAYISLT101	BAYISLT101	BAYISLT101
Start Kit	BAYKSKT263	BAYKSKT263	BAYKSKT263
Crankcase Heater Kit	BAYCCHT301RES	BAYCCHT301RES	BAYCCHT301RES
Snow Leg Kit 4”	BAYLEGS004	BAYLEGS004	BAYLEGS004
Snow Leg Kit 7”	BAYLEGS007A	BAYLEGS007A	BAYLEGS007A
Scroll Compressor Enclosure	BAYSDEN004	BAYSDEN004	BAYSDEN004
Low Ambient Kit	BAYLOAM107A	BAYLOAM107A	BAYLOAM107A
Wall Mount Kit	BRK05033[d]	BRK05033[d]	BRK05033[d]
Wind Baffle Kit	BAYWIND101	BAYWIND101	BAYWIND101
Refrigerant Lineset [e]			

[a] Certified in accordance with the Unitary Air-conditioner equipment certification program which is based on AHRI standard 210/240.
[b] Calculated in accordance with N.E.C. Only use HACR circuit breakers or fuses.
[c] Standard line lengths — 150’, Standard lift — 50’ Suction and Liquid line. For Greater lengths and lifts refer to refrigerant piping software Pub#32–3312–0* (* denotes latest revision)..
[d] Available from Trane Parts
[e] 25, 30, 35 and 50 foot linesets available. For a complete listing of lineset options available from equipment or supply stores, refer to the Trane Residential and Light Commercial Product Handbook.

Accessory Description and Usage

Evaporation Defrost Control — SPST Temperature actuated switch that cycles the condenser off as indoor coil reaches freeze-up conditions. Used for low ambient cooling to 30°F with TXV.

Rubber Isolators — Six (6) large rubber donuts to isolate condensing unit from transmitting energy into mounting frame or pad. Use on any application where sound transmission needs to be minimized.

Hard Start Kit — Start capacitor and relay to assist compressor motor startup. Use in areas with marginal power supply, on long linesets, low ambient conditions, etc.

AHRI Standard Capacity Rating Conditions

AHRI Standard 210/240 Rating Conditions

1. Cooling 80°F DB, 67°F WB air entering indoor coil, 95°F DB air entering outdoor coil.

AHRI Standard 270 Rating Conditions — (Noise rating numbers are determined with the unit in cooling operations.) Standard Noise Rating number is at 95°F outdoor air.

Model Nomenclature

Outdoor Units

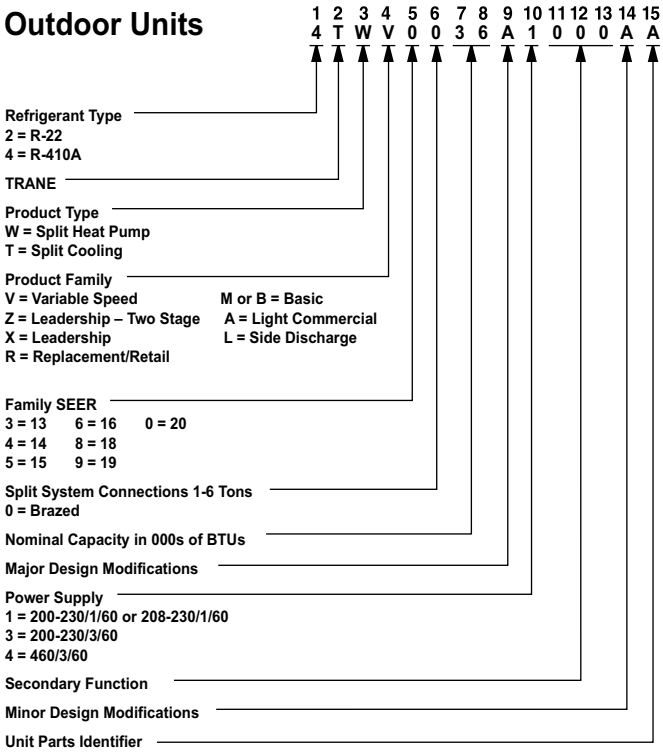

Wiring

Figure 1. Schematic: 1.5 —4 Ton Models

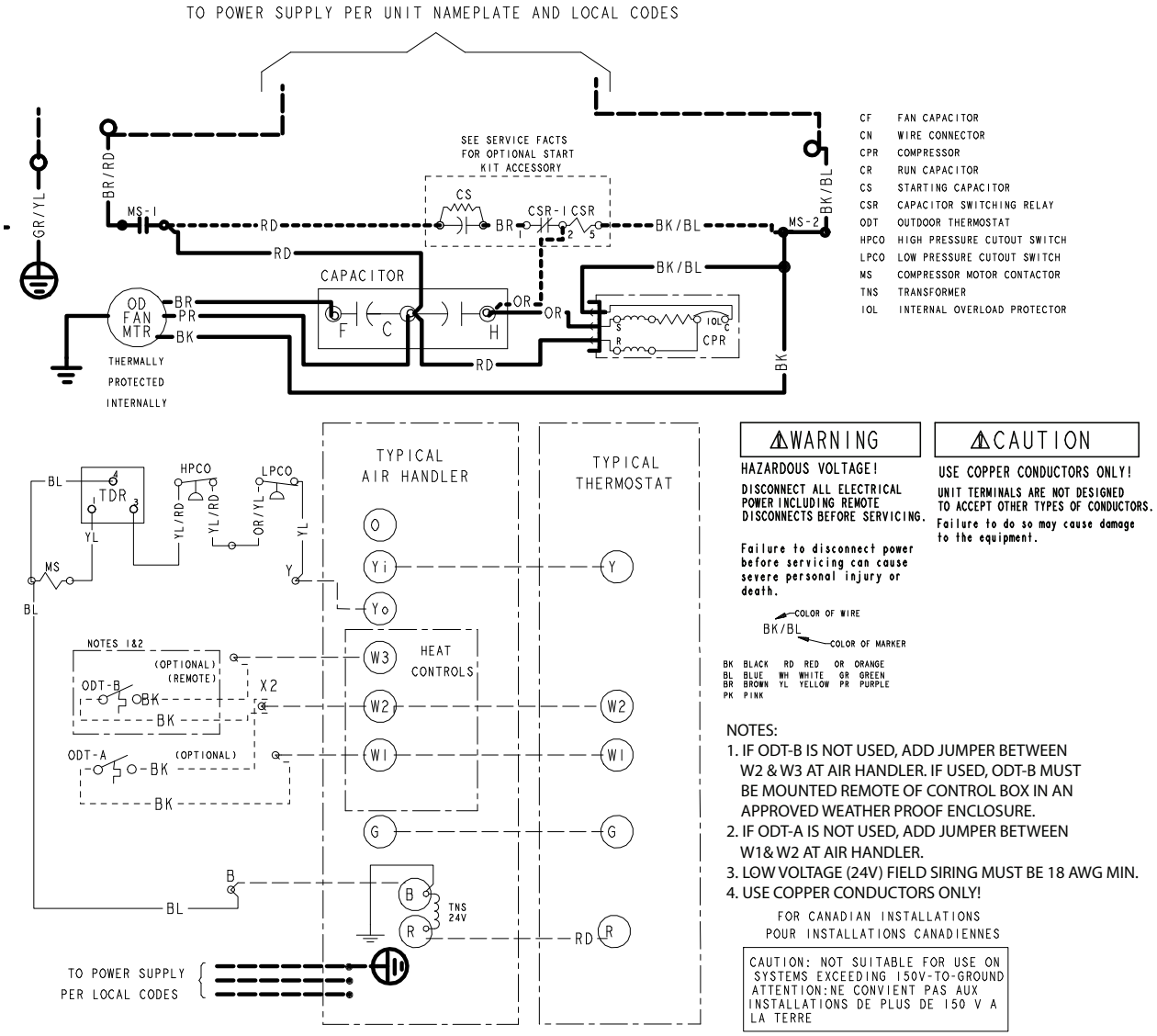

Figure 2. Schematic: 1.5 —4 Ton Models

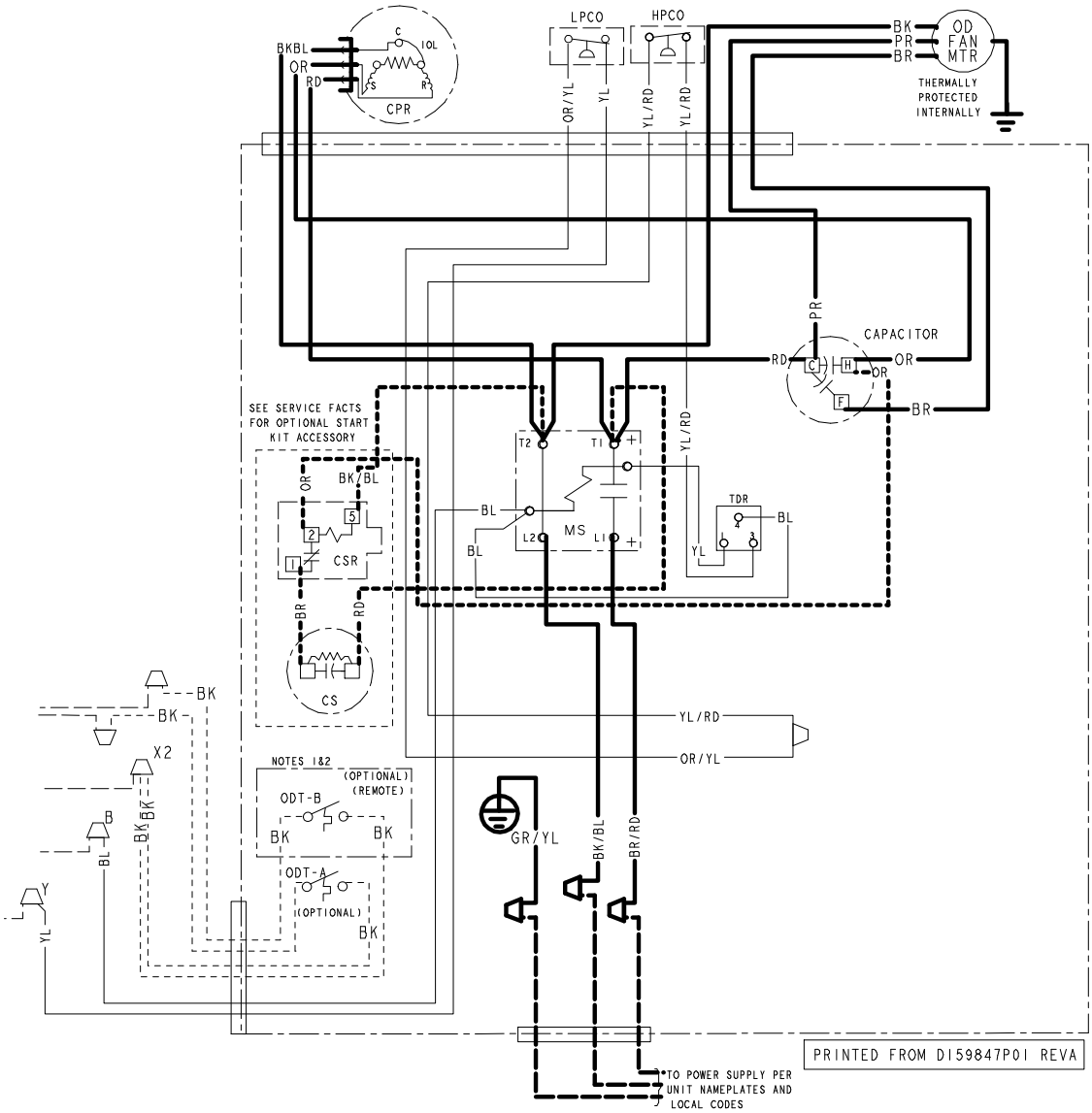

Figure 3. Schematic: 5 Ton Model

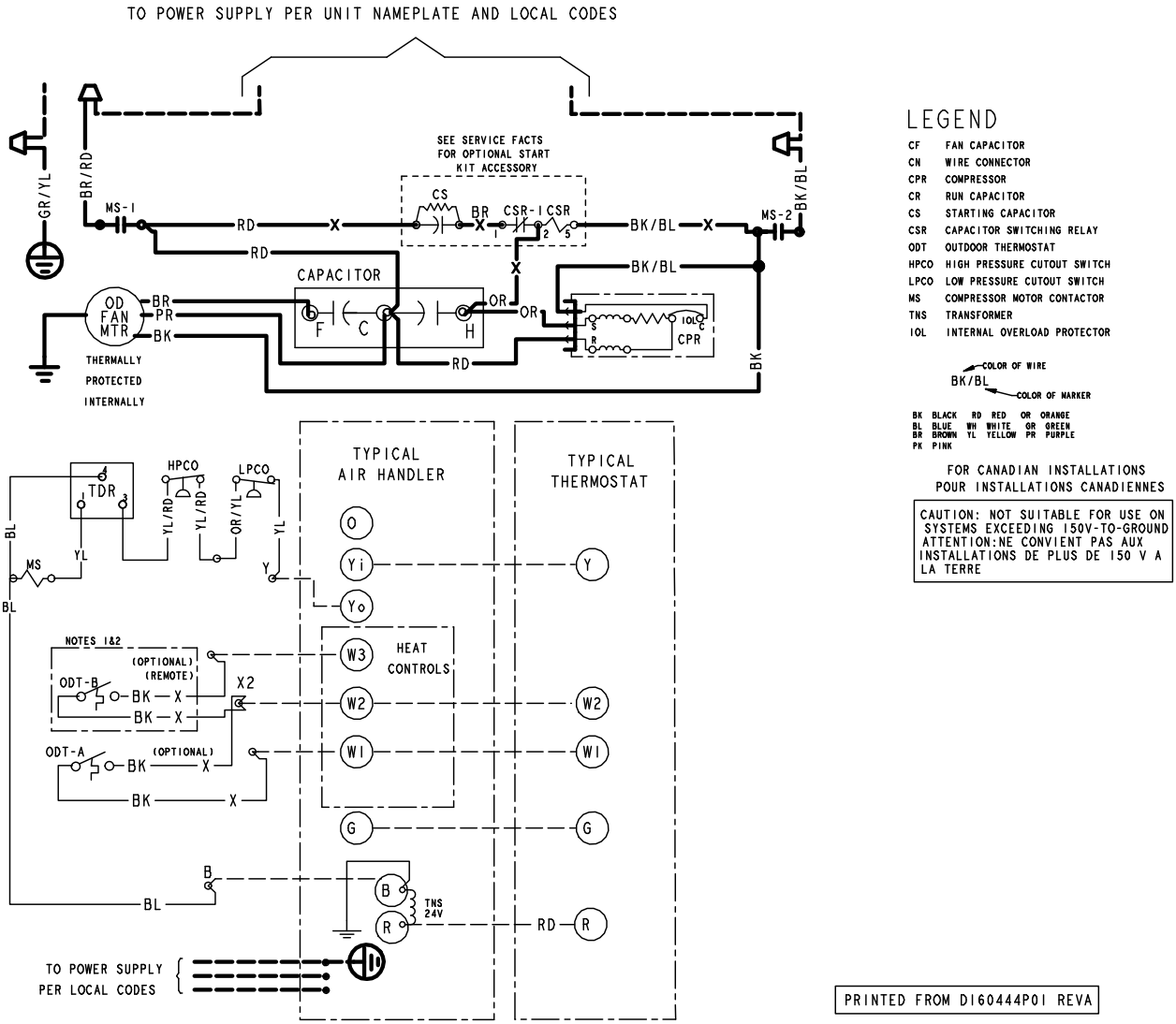

Figure 4. Schematic: 5 Ton Model

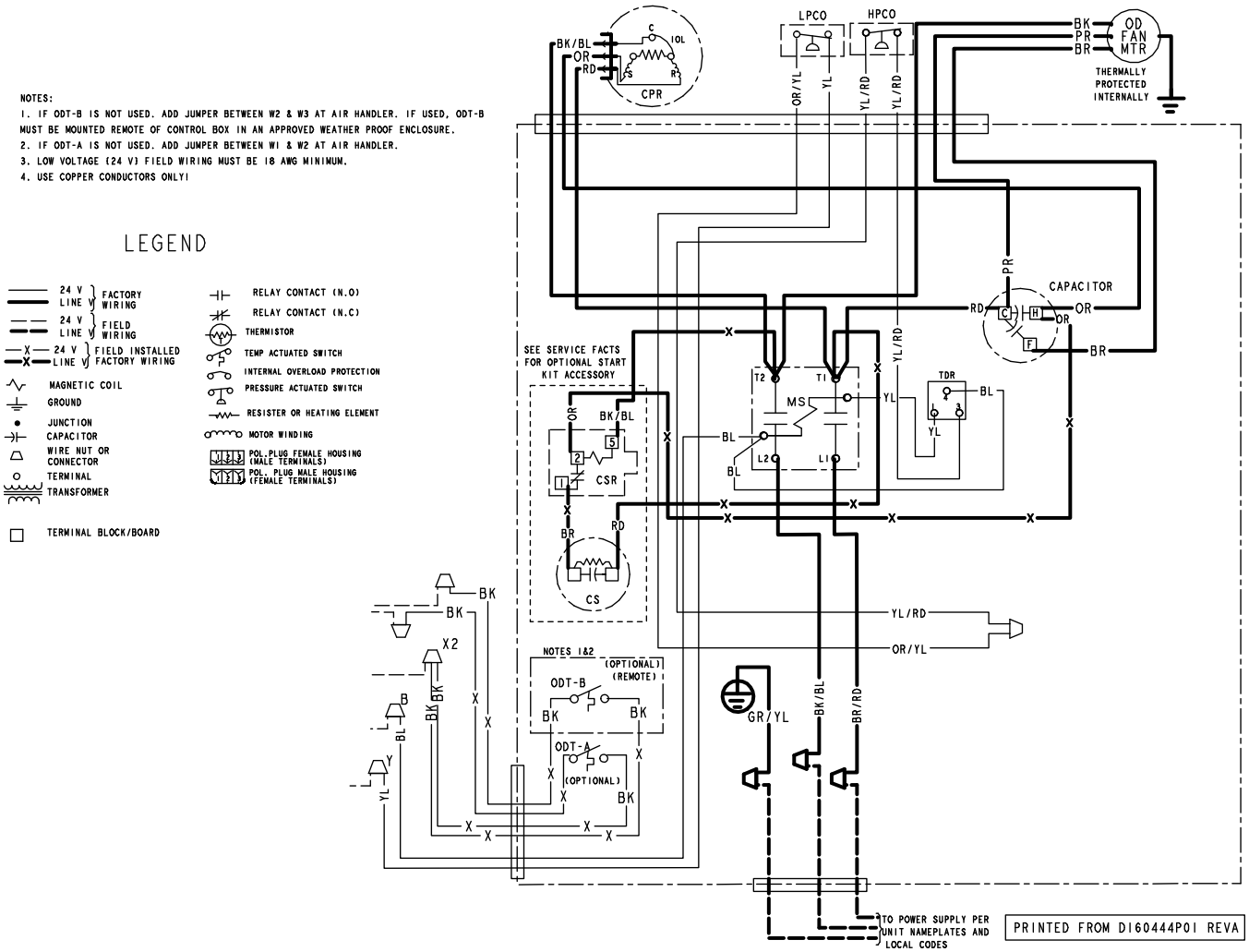

Mechanical Specification Options

General

The outdoor condensing units are factory charged with the system charge required for the outdoor condensing unit, ten (10) feet of tested connecting line, and the smallest rated indoor evaporative coil match. This unit is designed to operate at outdoor ambient temperatures as high as 115°F. Cooling capacities are matched with a wide selection of air handlers and furnace coils that are AHRI certified. The unit is certified to UL 1995. Exterior is designed for outdoor application.

Casing

Unit casing is constructed of heavy gauge, galvanized steel and painted with a weather-resistant powder paint finish. The corner panels are prepainted. All panels are subjected to our 1,000 hour salt spray test.

Refrigerant Controls

Refrigeration system controls include condenser fan, compressor contactor and low and high pressure switches. A factory supplied, field installed liquid line drier is standard.

Compressor

The compressor features internal over temperature and pressure protection. Other features include: Centrifugal oil pump and low vibration and noise.

Condenser Coil

The outdoor coil provides low airflow resistance and efficient heat transfer. The coil is protected on all four sides by louvered panels.

Low Ambient Cooling

As manufactured, this system has a cooling capacity to 55°F. The addition of an evaporator defrost control permits operation to 40°F. The addition of an evaporator defrost control with TXV permits low ambient cooling to 30°F.

The addition of the BAYLOAM107A low ambient kit permits ambient cooling to 20°F.

Thermostats—Cooling only and heat/cooling (manual and automatic change over). Sub-base to match thermostat and locking thermostat cover.

Trane - by Trane Technologies (NYSE: TT), a global innovator - creates comfortable, energy efficient indoor environments for commercial and residential applications. For more information, please visit trane. com or tranetechnologies.com.

The AHRI Certified mark indicates Trane U.S. Inc. participation in the AHRI Certification program. For verification of individual certified products, go to ahridirectory.org.

Trane has a policy of continuous data improvement and it reserves the right to change design and specifications without notice. We are committed to using environmentally conscious print practices.

22-1931-1H-EN 13 May 2020
Supersedes 22-1931-1G-EN (February 2020)

©2020 Trane